*For more info about compatibility with other models
please see the sticker on the skid plate

MERCEDES-BENZ V-CLASS 4WD

No.: 3932.1 Engine
3933.1 Gearbox

Year: 2014-
Engine: 2.1 (163hp; 190hp)
Transmission: AT

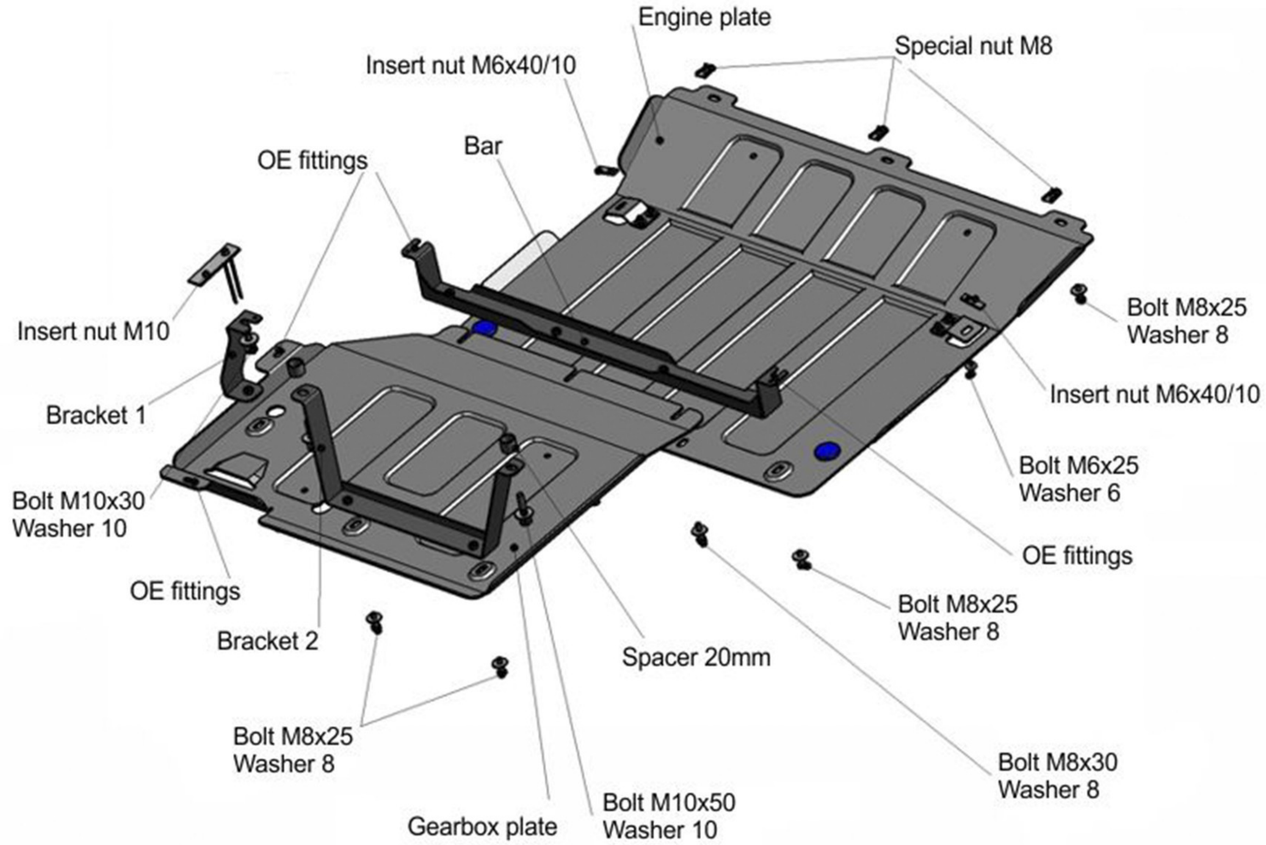

FITTING KIT

1. Bolt M6x25	2 pc
2. Bolt M8x25	7 pc
3. Bolt M8x30	3 pc
4. Bolt M10x30	1 pc
5. Bolt M10x50	2 pc
6. Insert nut M6x40/10	2 pc
7. Insert nut M10	1 pc
8. Bracket 1	1 pc
9. Bracket 2	1 pc
10. Bar	1 pc
11. Washer 6	2 pc
12. Washer 8	10 pc
13. Washer 10	3 pc
14. Special nut M8	3 pc
15. Spacer 20mm	2 pc

INSTALLATION INSTRUCTIONS

1. Remove OE duster..
2. Remove OE special nuts in front end of the vehicle, then mount supplied special nuts M8.
3. Remove plastic caps from front end of underframe, then mount insert nuts M6x40/10.
4. Remove plug between rear fittings of underframe, place insert nut M10 and then screw bolt M10x30 into it. Install bracket 1.
5. Screw front original fitting of gearbox bracket out, then fix bracket 2 with bolts M10x50 through spacer 20mm.
6. Install engine plate. Fix its front end to special nuts M8 with bolts M8x25, then fix its rear end to bar with bolts M8x30 and M8x25, and then fix center of plate to insert nuts M6x40/10 with bolts M6x25.
7. Place front end of gearbox plate under rear end of engine plate, fix rear end to bracket 2 with bolts M8x25, then fix its side to bracket 1 with bolts M8x25.
8. Fix second part of OE duster to gearbox plate with original screws.
9.

IMPORTANT: Skid Plate installations should only be done by a qualified person and it is the responsibility of this person to ensure correct fitment.