INSTALLATION MANUAL

RIVAL
4x4 ACCESSORIES

PRODUCT: MOUNTING BRACKETS FOR ROOF RACK

APPLICATION: TOYOTA LAND CRUISER 250 (2024-PRESENT)

PART NO: 2M.5710.K

CAUTION!

To reduce the risk of serious injury or damage to property: Before you start installing and using this product, read the full instructions, pay special attention to the conditions of safe use and recommendations for installation! When installing or maintaining this product, it is necessary to use protective goggles. Check the integrity of the installed components and torque all hardware every 250 miles (400 kms). Discontinue use if there is any damage to the structure or fasteners!

NOTICE

Skid plates are supplemental protection. We cannot guarantee protection against all possible damage from impacts. When driving, be careful of objects and terrain that may damage sensitive parts of the vehicle.

MOUNTING BRACKETS

Part number:	2M.5710.K
Suited to vehicle:	Toyota Land Cruiser 250 (2024-Present)
Material:	Stainless steel
Added Vehicle Height:	4 inch (102mm)

SAFETY NOTICE

* The RIVAL roof rack is designed to complement the use and design of the specified vehicle under conditions underlined by the vehicle manufacturer.
* While driving the vehicle at any speed, collision with another vehicle, animal or object must always be avoided.
* The operation of a vehicle where the roof rack is not properly attached and fastened to the vehicle, or where it has been damaged, must be avoided at all cost.
* It is recommended that you carry out regular inspections of all the bracket fittings.
* Roof load capacity specified by vehicle manufacturer - 176lbs (80kg)
* Recommended speed limit with installed roof rack up to 56m/h (90 km/h)

INSTALLATION NOTICE

* The RIVAL roof rack must be mounted and affixed to the vehicle according to the installation manual provided by an authorized RIVAL dealer or Motor dealer or by a special vehicle repair or fitment center.
* Personal safety during the installation process must be adhered to at all times and the use of personal safety equipment is highly recommended.

REQUIRED TOOLS

* Basic tool kit
* Torque wrench

TORQUE SETTING

* M6 - 9 Nm (6.6 lb/ft),
* M8 - 24 N·m (17.7 lb/ft)

PARTS LISTING

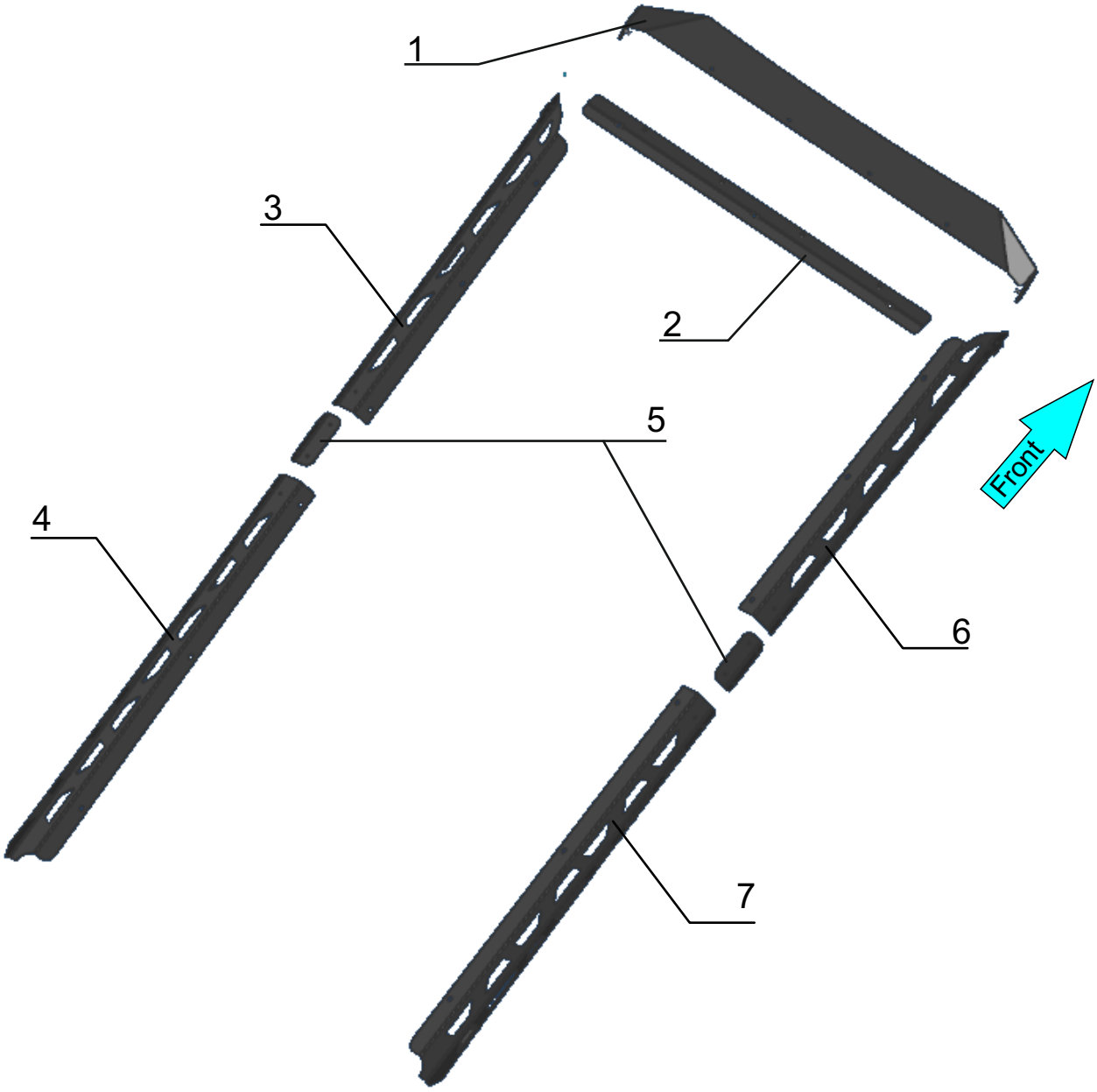

1. Wind deflector.....Qty 1
2. Wind deflector bracket.....Qty 1
3. Front left bracket.....Qty 1
4. Rear left bracket.....Qty 1
5. Central connecting bracket.....Qty 2
6. Front right bracket.....Qty 1
7. Rear right bracket.....Qty 1

PARTS LISTING

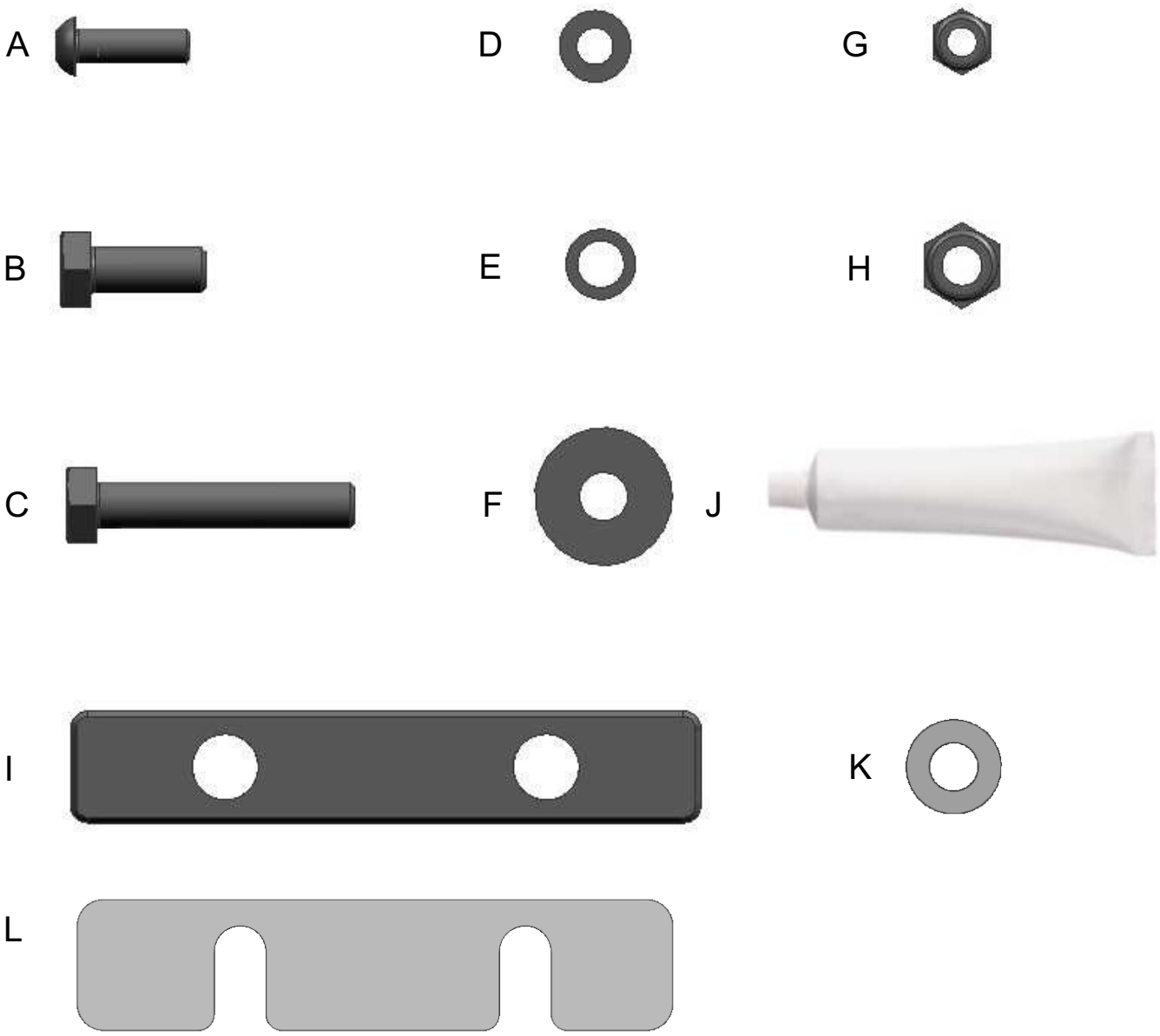

A. Screw M6x1x20.....Qty 16
B. Bolt M8x1.25x20.....Qty 15
C. Bolt M8x1.25x50.....Qty 12
D. Washer M6.....Qty 24
E. Spring washer M8.....Qty 12
F. Washer penny M8.....Qty 24
G. Nut M6.....Qty 8
H. Nut M8.....Qty 15
I. Spacer.....Qty 6
J. Sealant.....Qty 1
K. Washer M8.....Qty 3
L. Adjustment plate.....Qty 6

INSTALLATION PROCEDURE

***If you have LC250 without factory roof rails, skid steps 1-4**

Fig. 1

1. Remove rear factory plastic pads from the roof rails.

Fig. 2

2. Remove central factory plastic pads from the roof rails.

Fig. 3

3. Remove front factory plastic pads from the roof rails.

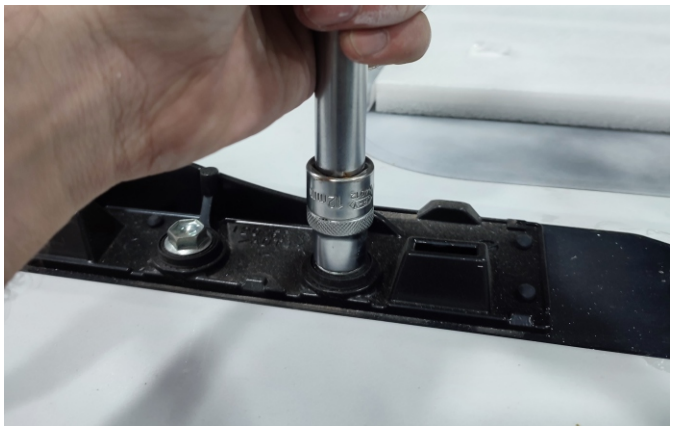

Fig. 4

4. Remove factory roof rails with saddle brackets.

***Repeat the same step for the other side of the vehicle.**

INSTALLATION PROCEDURE

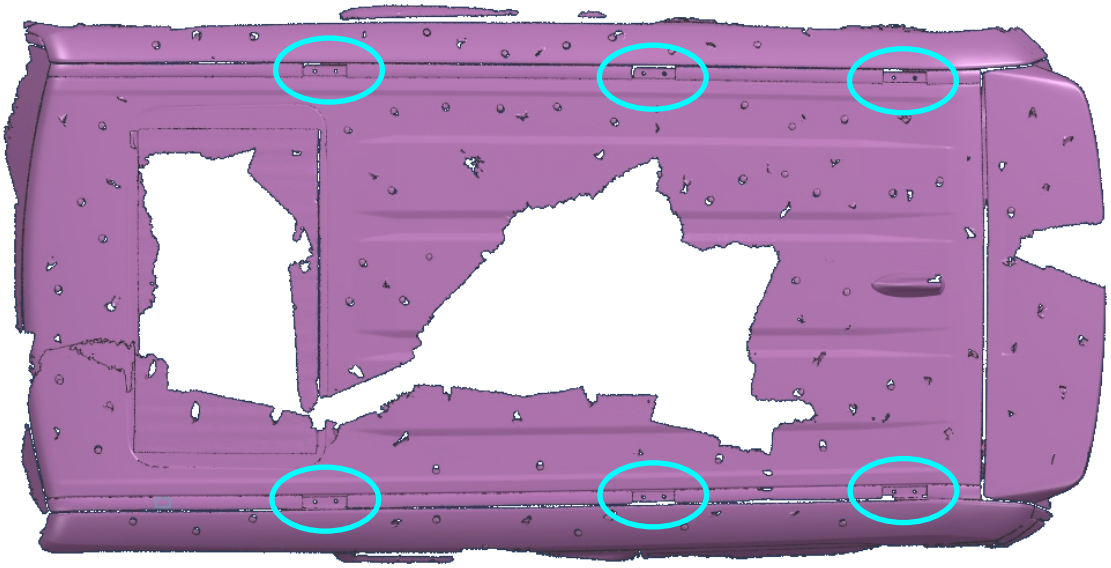

Fig. 5

5. For LC250 without factory roof rails remove covers and saddle brackets as shown in fig 5.

Fig. 6

Fig. 7

6. Apply sealant (item J) and put the spacers at all mounting points of the roof as shown in fig 6 and 7.

INSTALLATION PROCEDURE

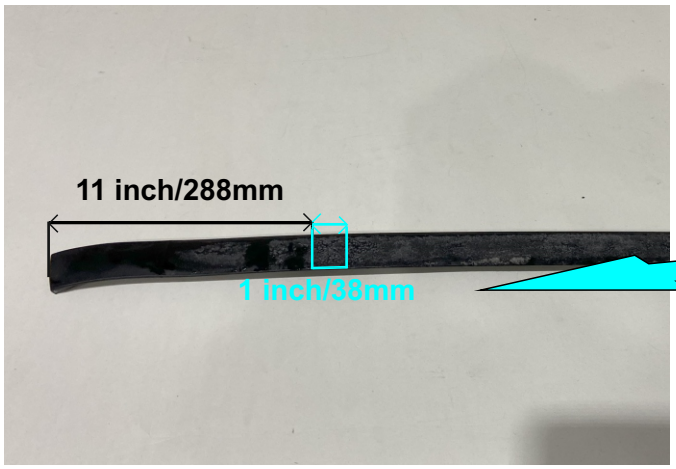

Fig. 8

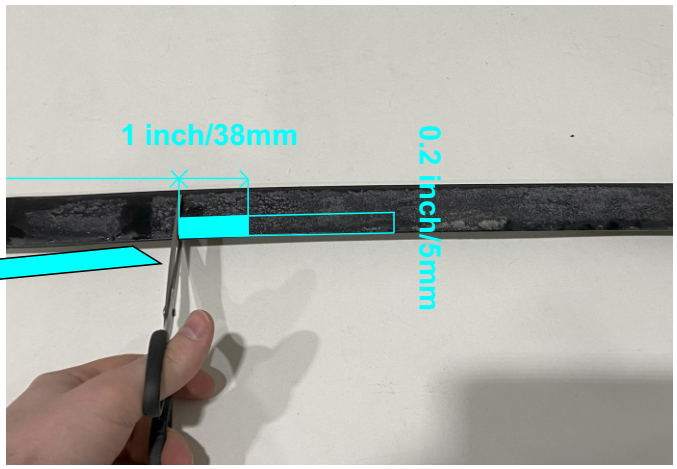

Fig. 9

7. Mark the position of the front foot in the ditch as shown in fig. 8. After that, remove gutter seal from the roof rack. Trim the gutter seal and remove the small part (38x5 mm) as shown in fig.9.

***Do not cut rubber seal on the vehicle to avoid damaging the roof.**

Fig. 10

Fig. 11

8. Secure right front bracket (item 1) and right rear bracket (item 3) using central connecting bracket (item 5) and the supplied fitting: screws M6x20, washers M6 and nuts M6 (items A, D, G) as shown in fig. 10 and 11.

***Tighten hardware after that.**

INSTALLATION PROCEDURE

Fig. 12

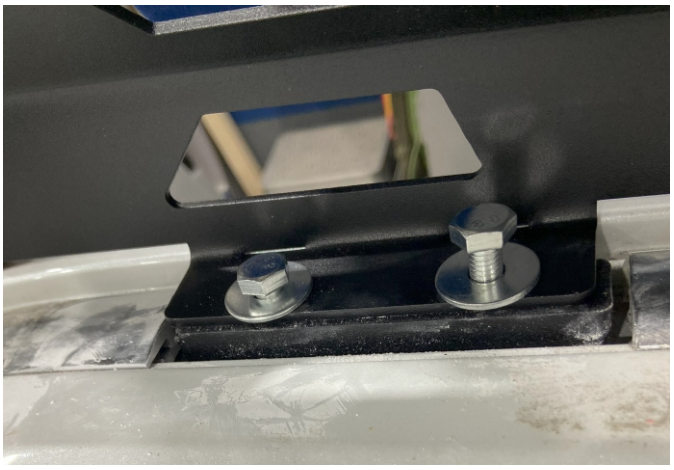

Fig. 13

9. Secure assembled bracket to pre-installed spacers on the right side of the vehicle using bolts M8x45, spring washers M8 and penny washers M8 (items C, E, F). Slide the front foot in the ditch under the drain seal.

***Tighten hardware after that.**

10. Repeat steps 7-9 for the other side of the vehicle.

11. When the mounting brackets are finally torqued, install previously trimmed factory gutter seal back to the roof rack on both sides of the vehicle.

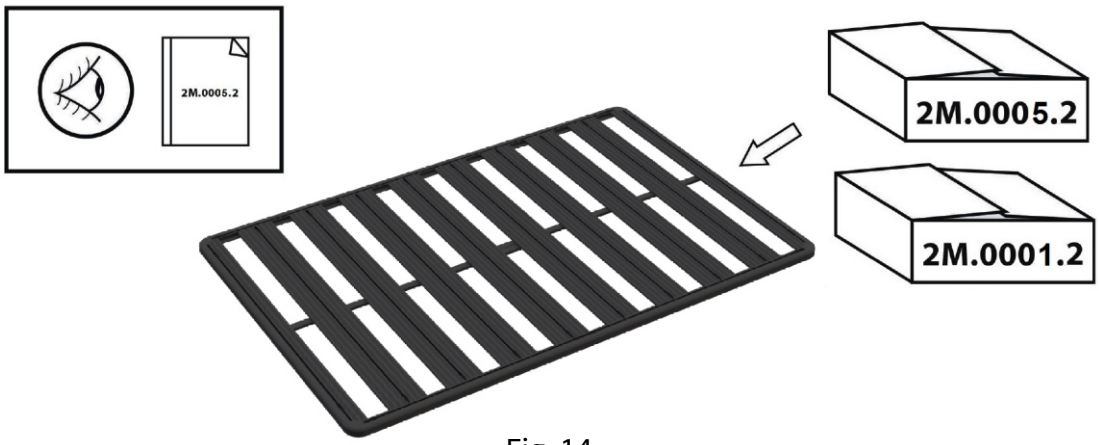

Fig. 14

12. Assemble the roof rack platform following the instructions 2M.0005.2.

INSTALLATION PROCEDURE

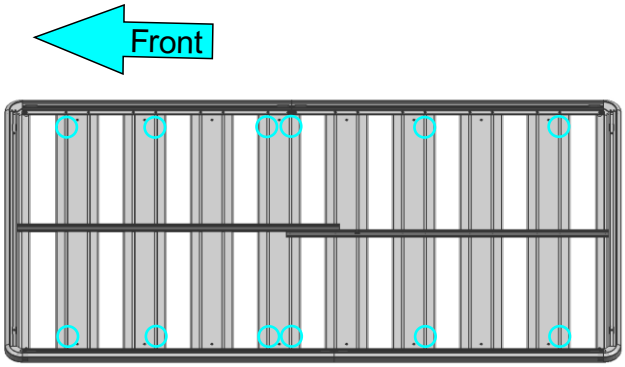

Fig. 15

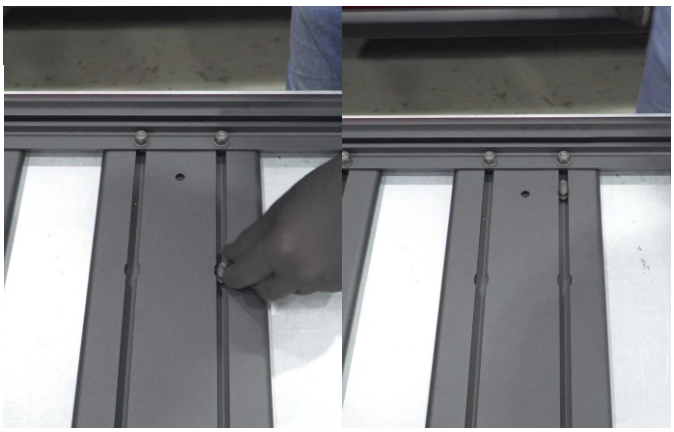

Fig. 16

13. Insert bolts M8x20 (item B) on marked in fig. 15 positions using entry slots as shown in fig.16.

Fig. 17

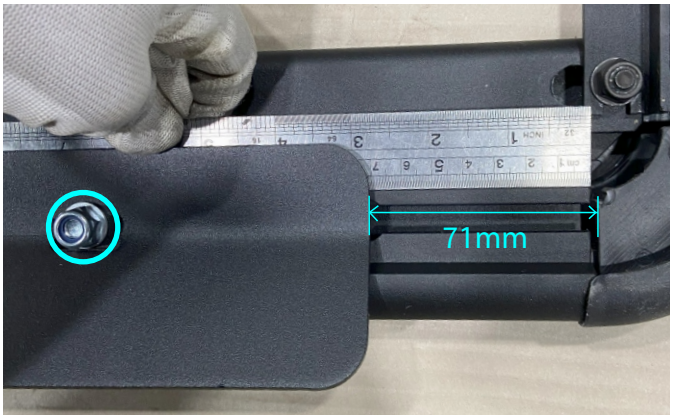

Fig. 18

14. Install wind deflector bracket (item 2) using bolts M8x20, washers M8 and nuts M8 (items B,E,H) as shown in fig.17 and 18.
***Set the wind deflector bracket as shown in fig. 18.**

****Tighten hardware after that.**

INSTALLATION PROCEDURE

Fig. 19

15. Install the roof rack platform on the brackets. Make sure each bolt sits in the slot of the roof bracket.

Fig. 20

16. Secure the roof rack platform using washers M8 and nuts M8 (items F, H).

***Tighten hardware after that.**

Fig. 21

17. Install wind deflector (item 1) using screws M6x20 with washers M6 (items A,D) as shown in fig. 21.

Fig. 22

18. Align platform and make sure that distance A=B as shown in fig.22.

INSTALLATION PROCEDURE

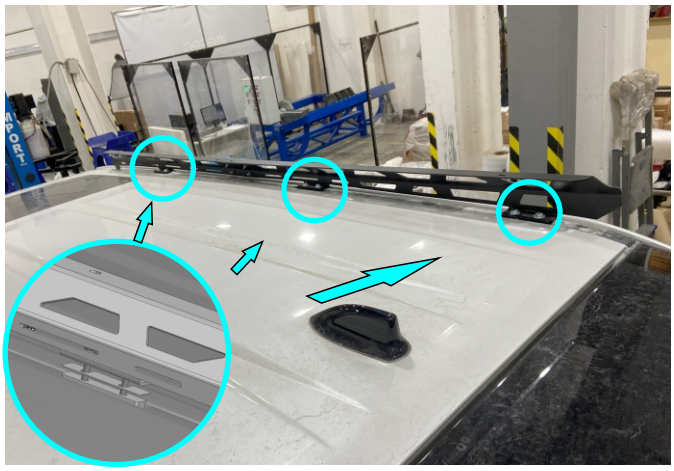

Fig. 23

19. If there is a small deflection of the central part of the roof rack, it is necessary to remove the platform 2M.0005.2, slightly loosen the bolts on the mounting brackets and slide adjustment plates (Item L) between the bracket and the spacer in the central part as shown in fig. 23.

***Once all bolts are installed, check roof rack alignment and tighten all previously installed hardware.**

INSTALLATION PROCEDURE

Before operating a vehicle fitted with RIVAL Skid Plate:

- Make sure all hardware is torqued.
- Ensure the integrity of the structure and all its components.

INSTALLATION MANUAL OF ADDITIONAL KIT 2195 MM

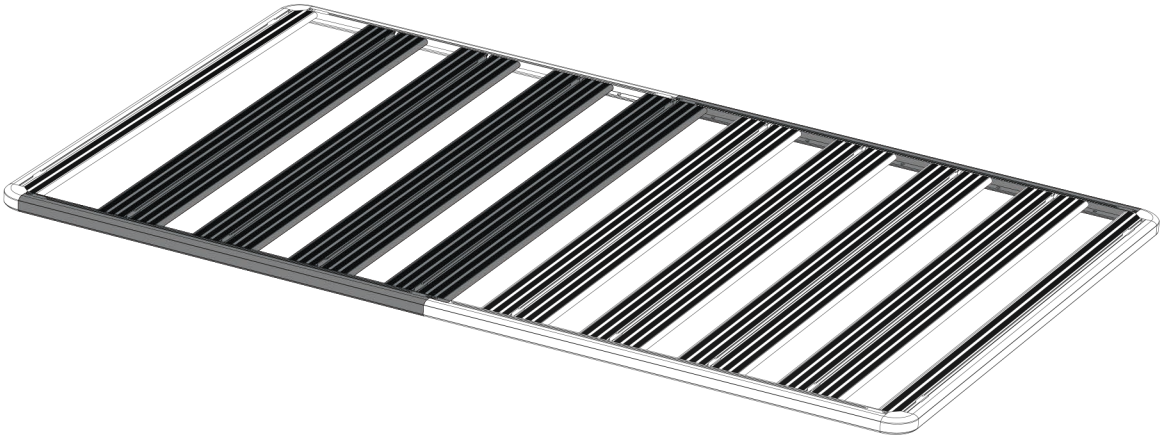

2M.0005.1 ; 2M.0005.2 ; 2M.0005.3 ; 2M.0005.4 ; 2M.0005.5

WWW.RIVAL4X4.COM

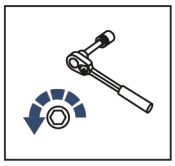

Regular fasteners

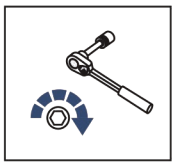

Regular fasteners

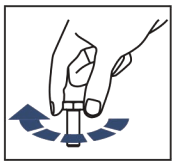

Screw a several turns

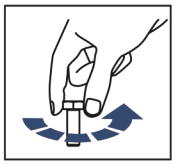

Loosen bolts

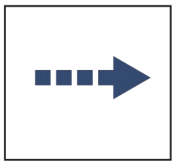

Movement Arrow

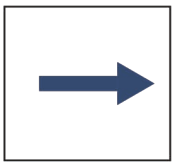

Location/Position Arrow

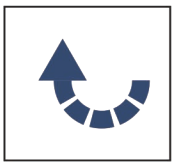

Screw Arrow

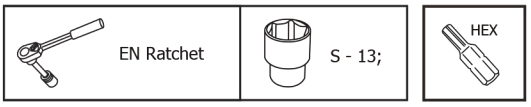

1

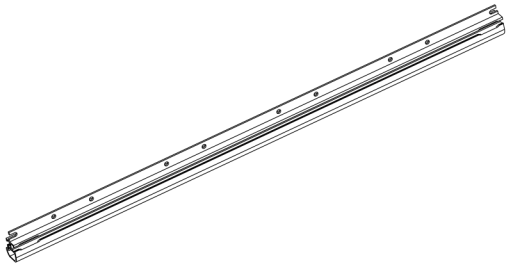

960 mm x2

2

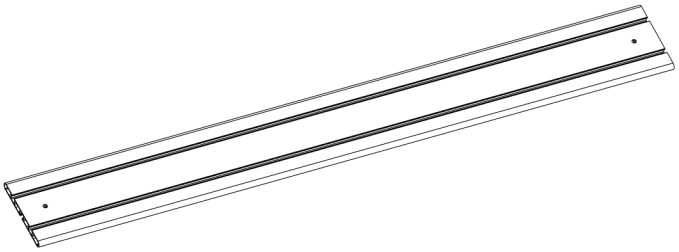

x4

5

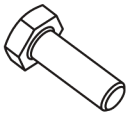

M8x16 x16

6

M8 x16

7

ø8 x16

8

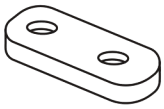

M8 x2

9

ø8 x2

10

M8x20 x4

11

ø8 x4

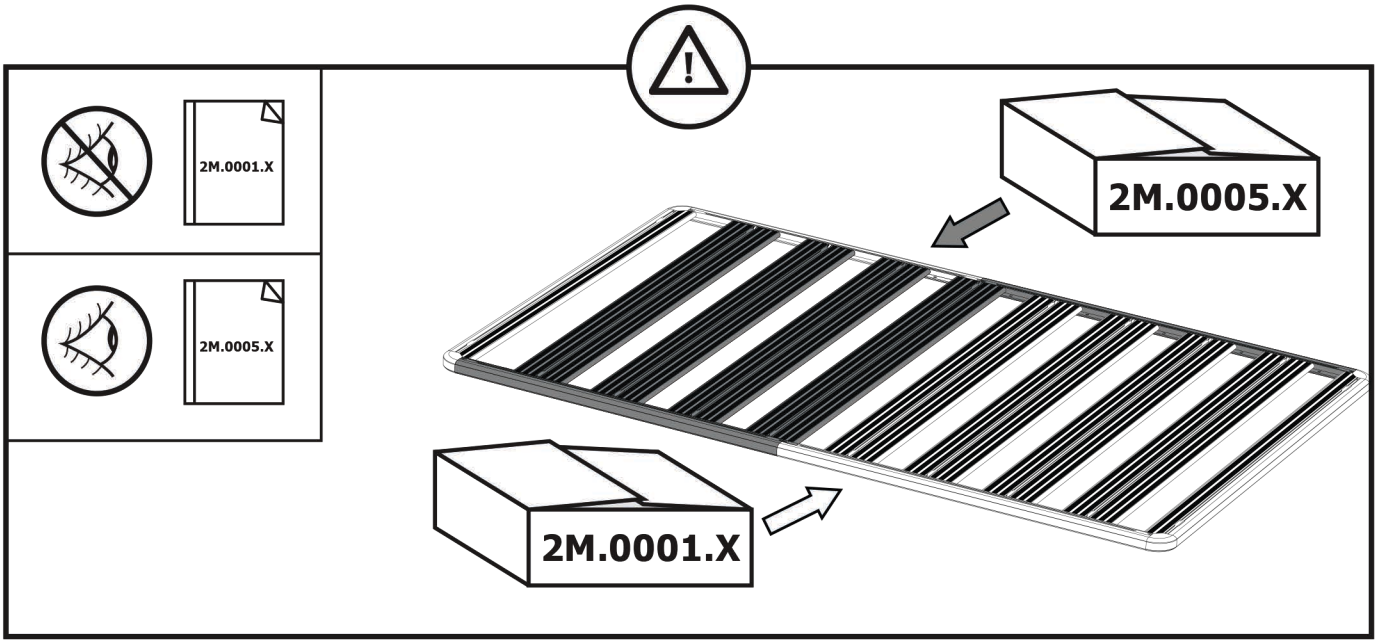

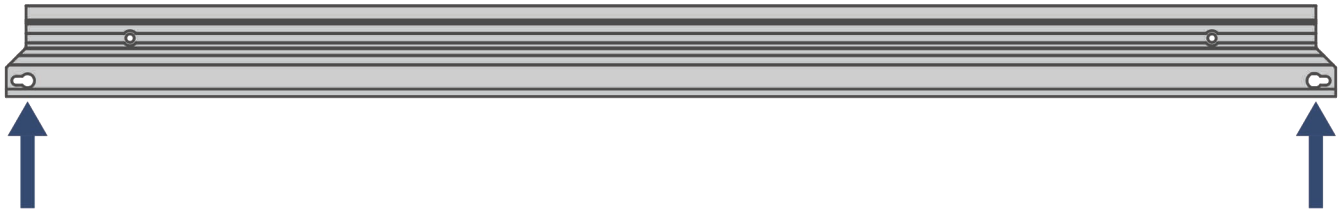

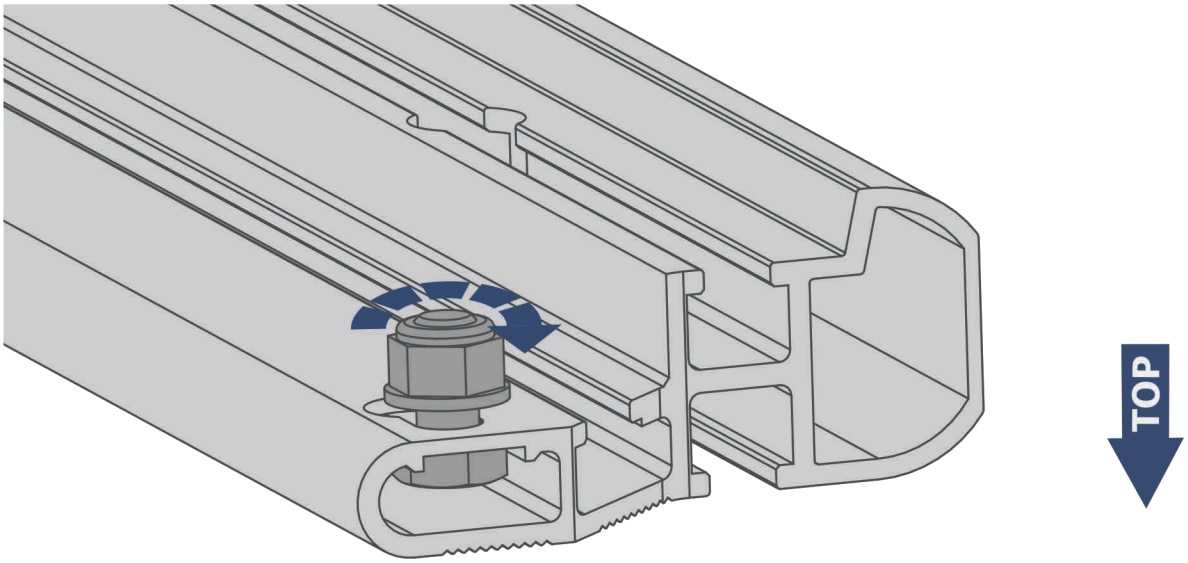
TOP

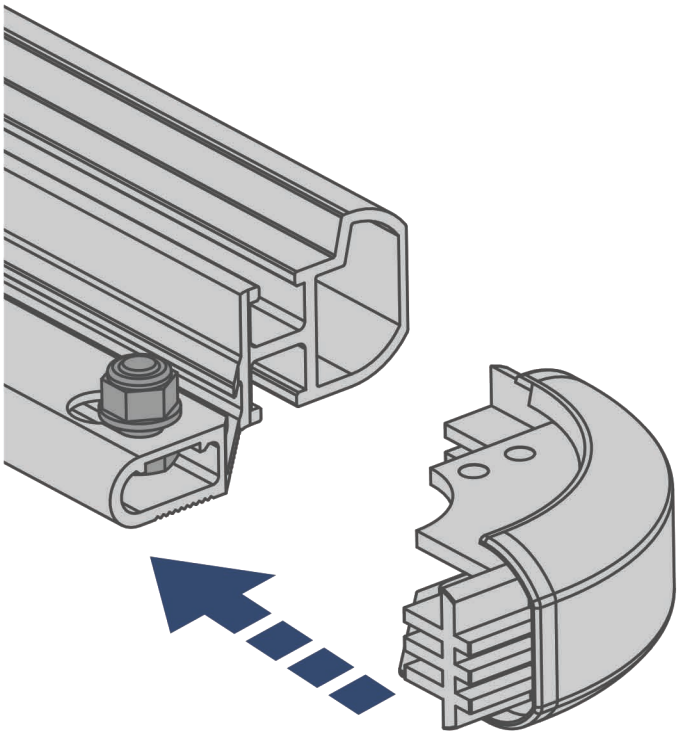

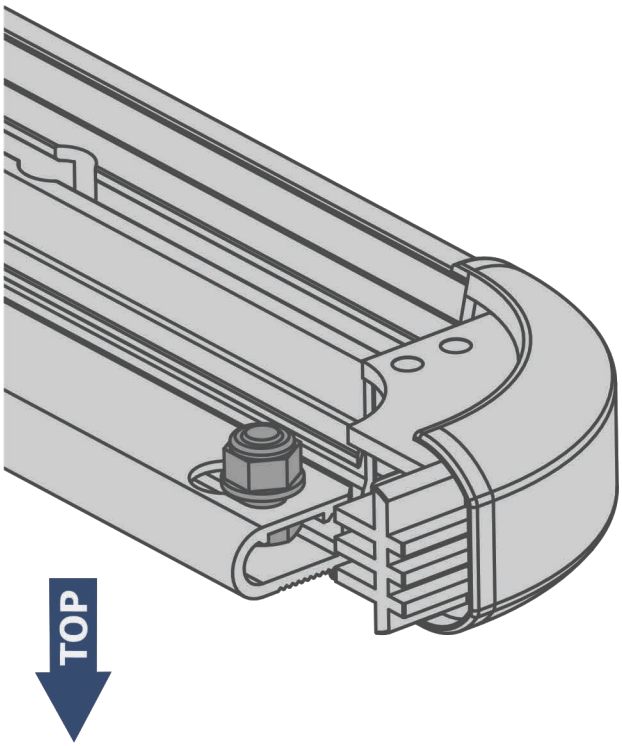
TOP

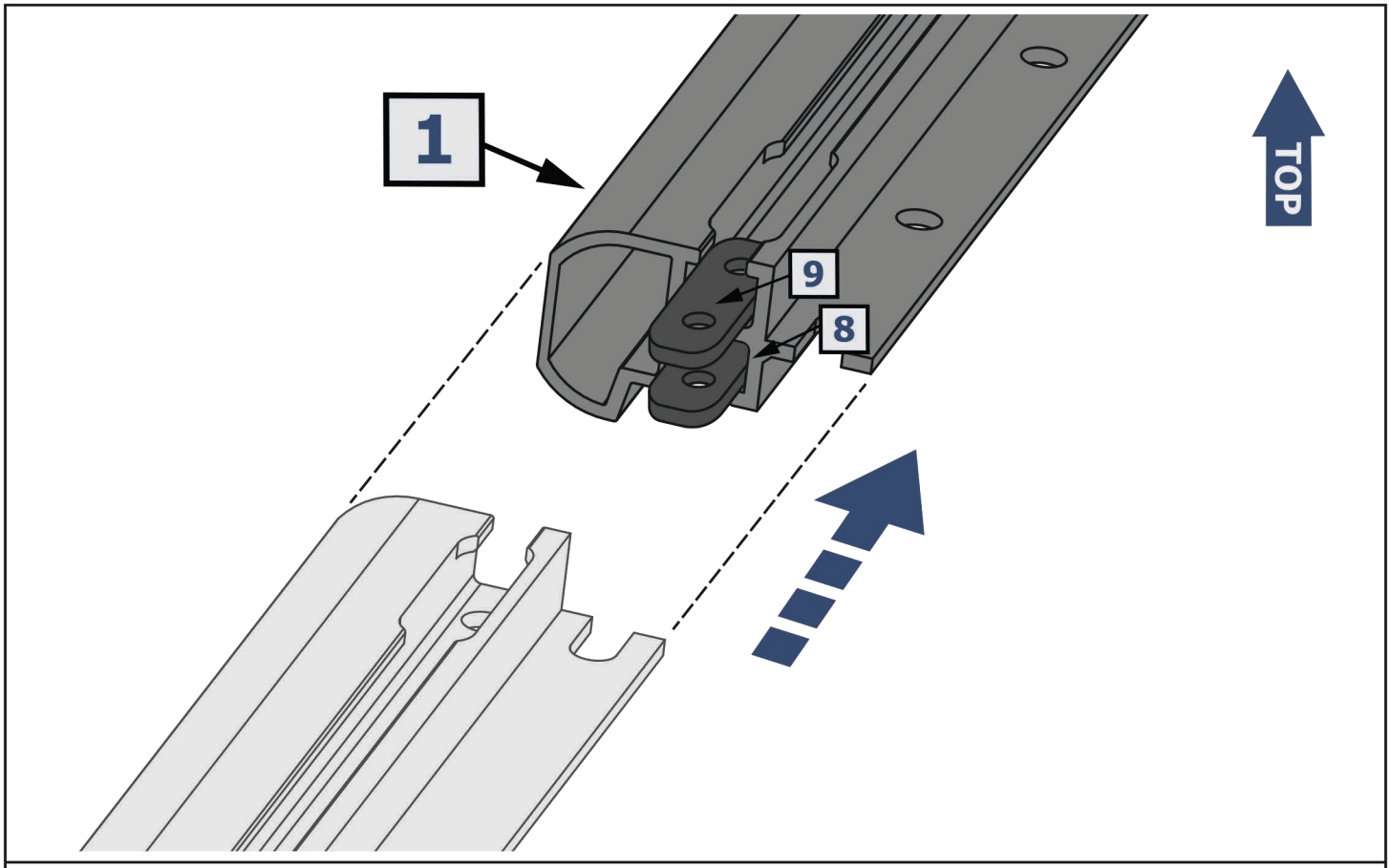
1
9
8
TOP

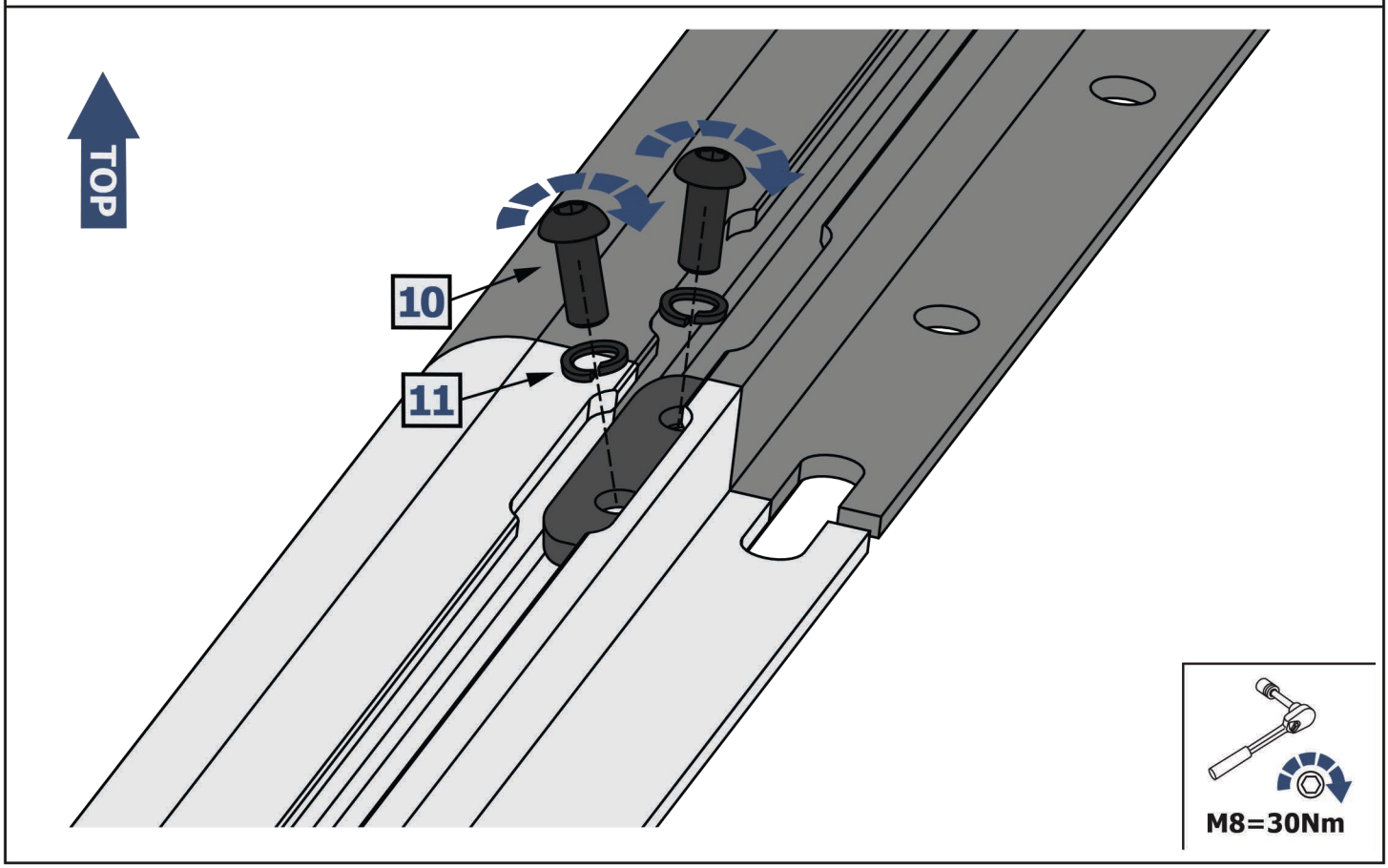
TOP
10
11
M8=30Nm

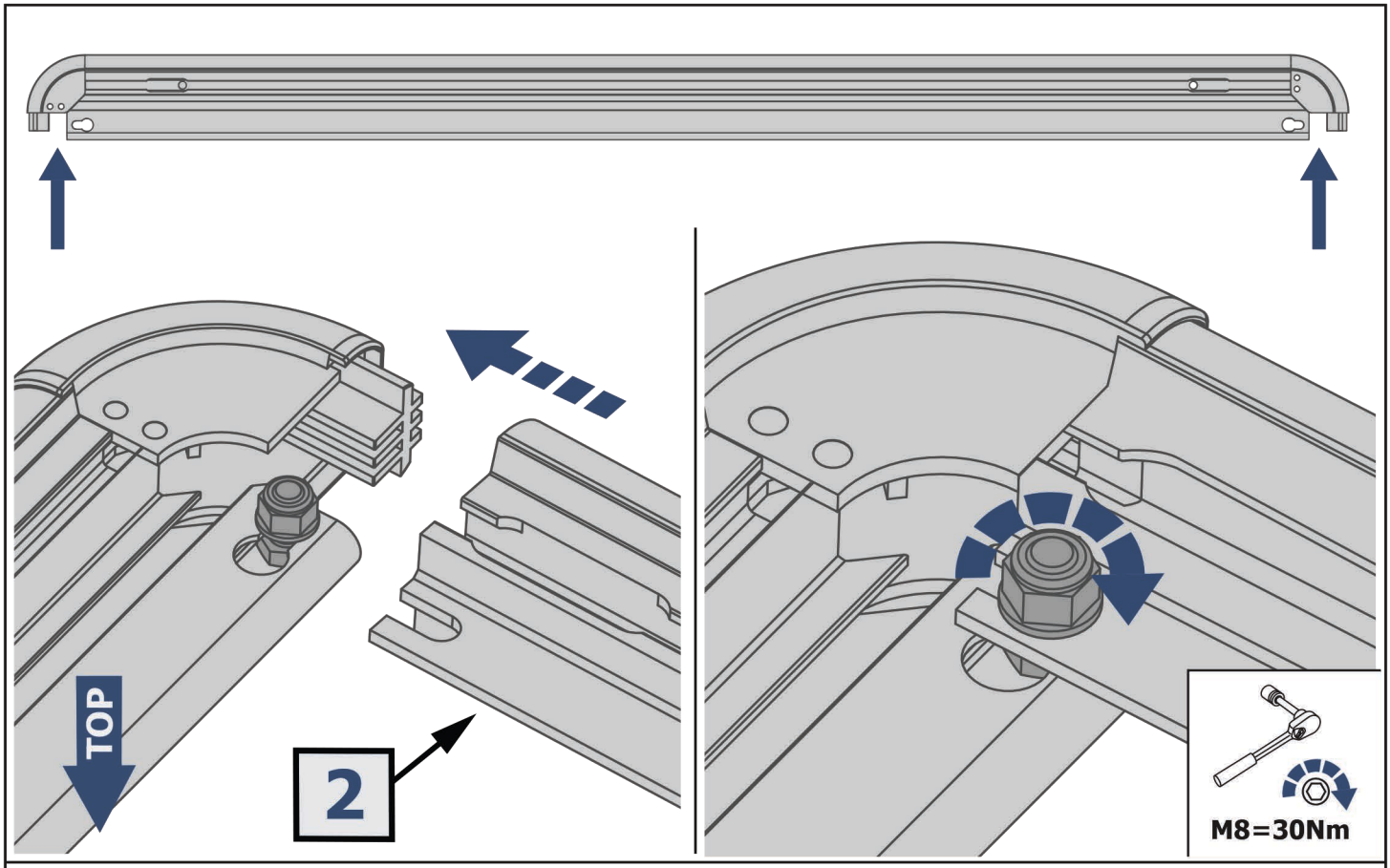
TOP
2
M8=30Nm

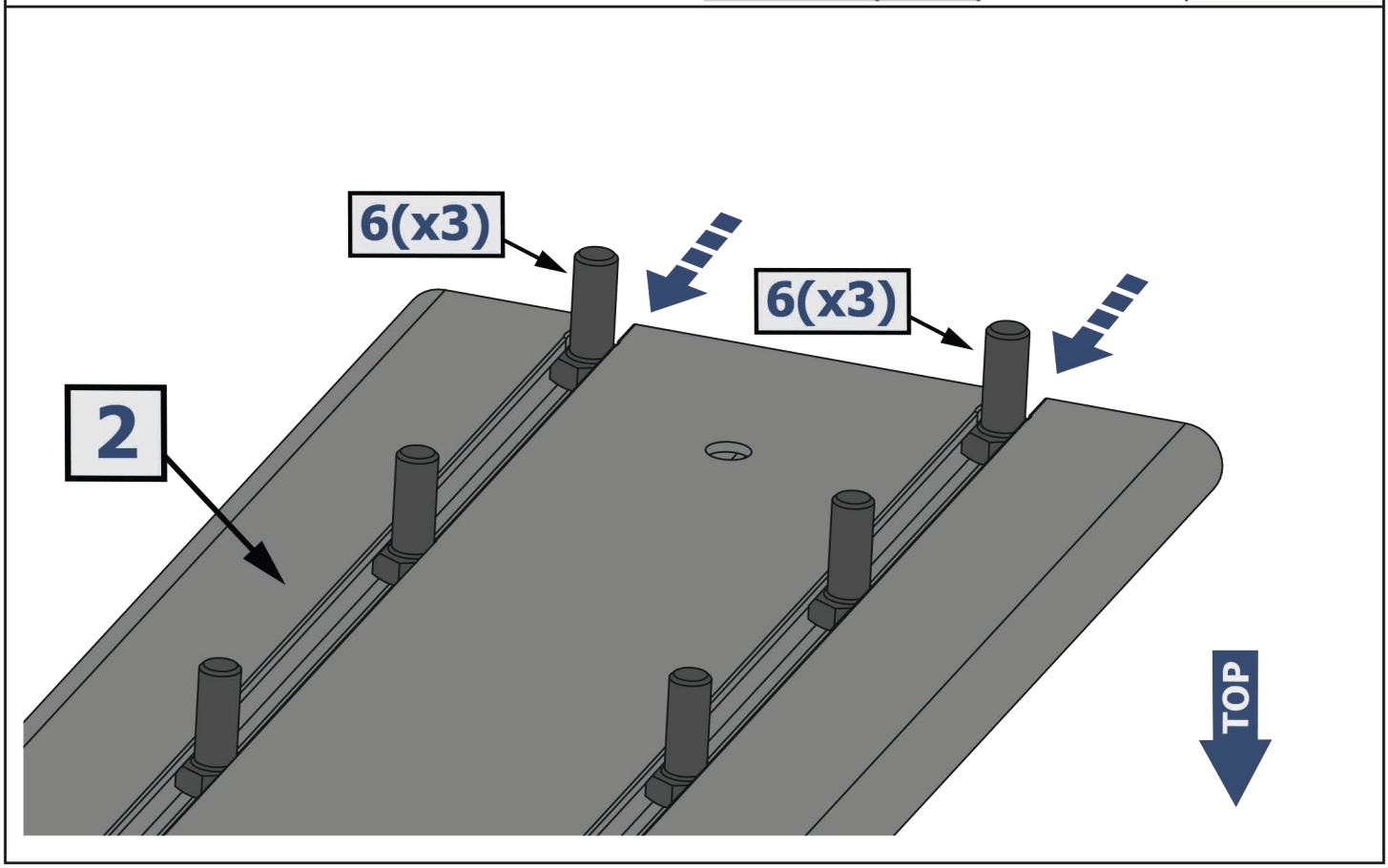
6(x3)
6(x3)
2
TOP

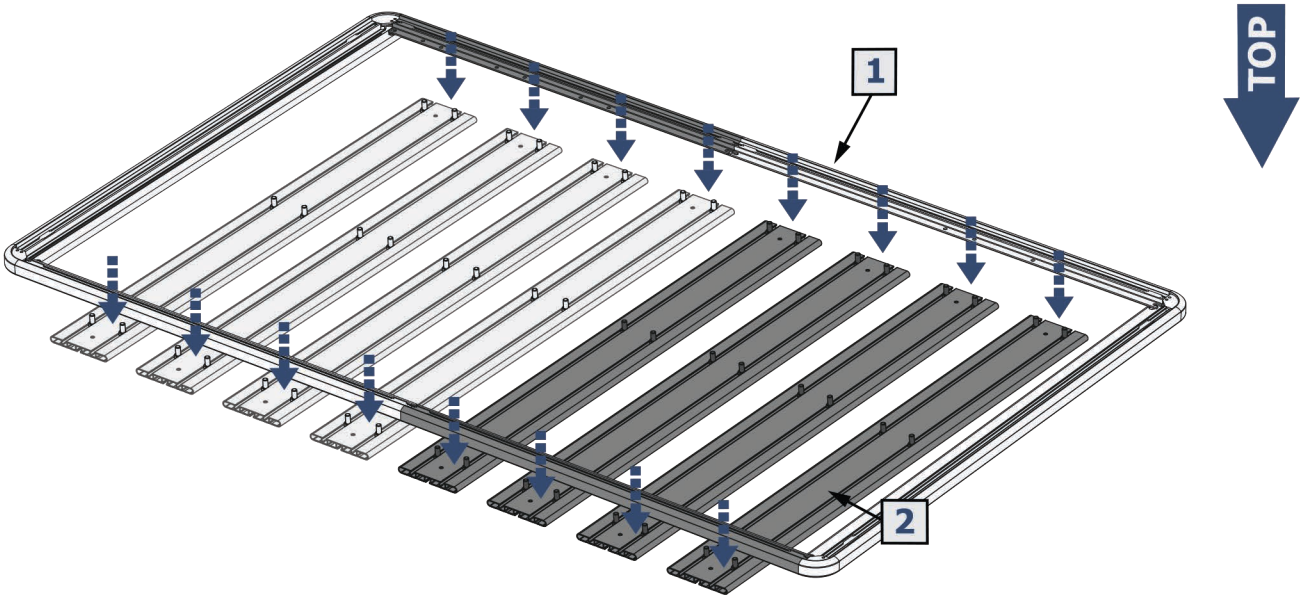
1
2
TOP

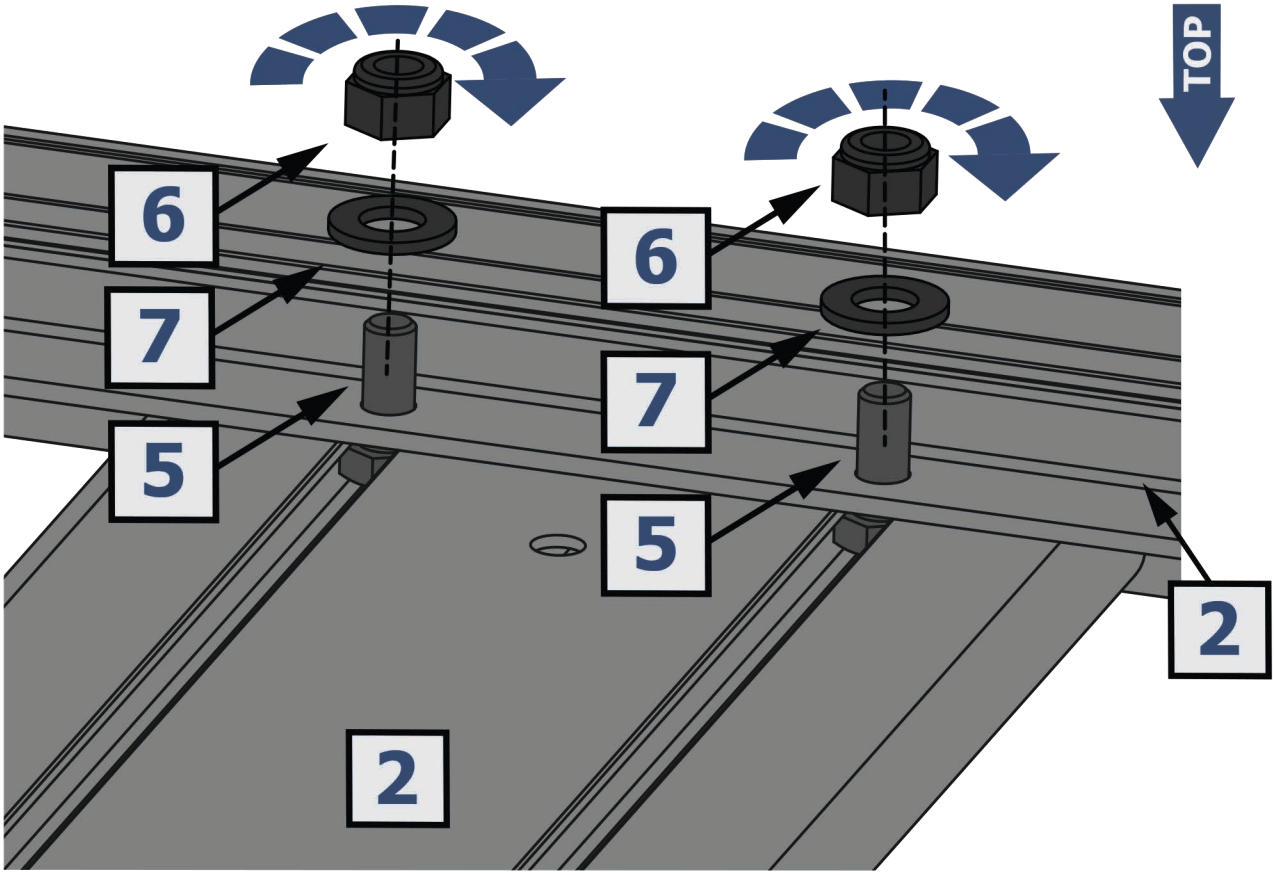
TOP
6
7
5
6
7
5
2
2

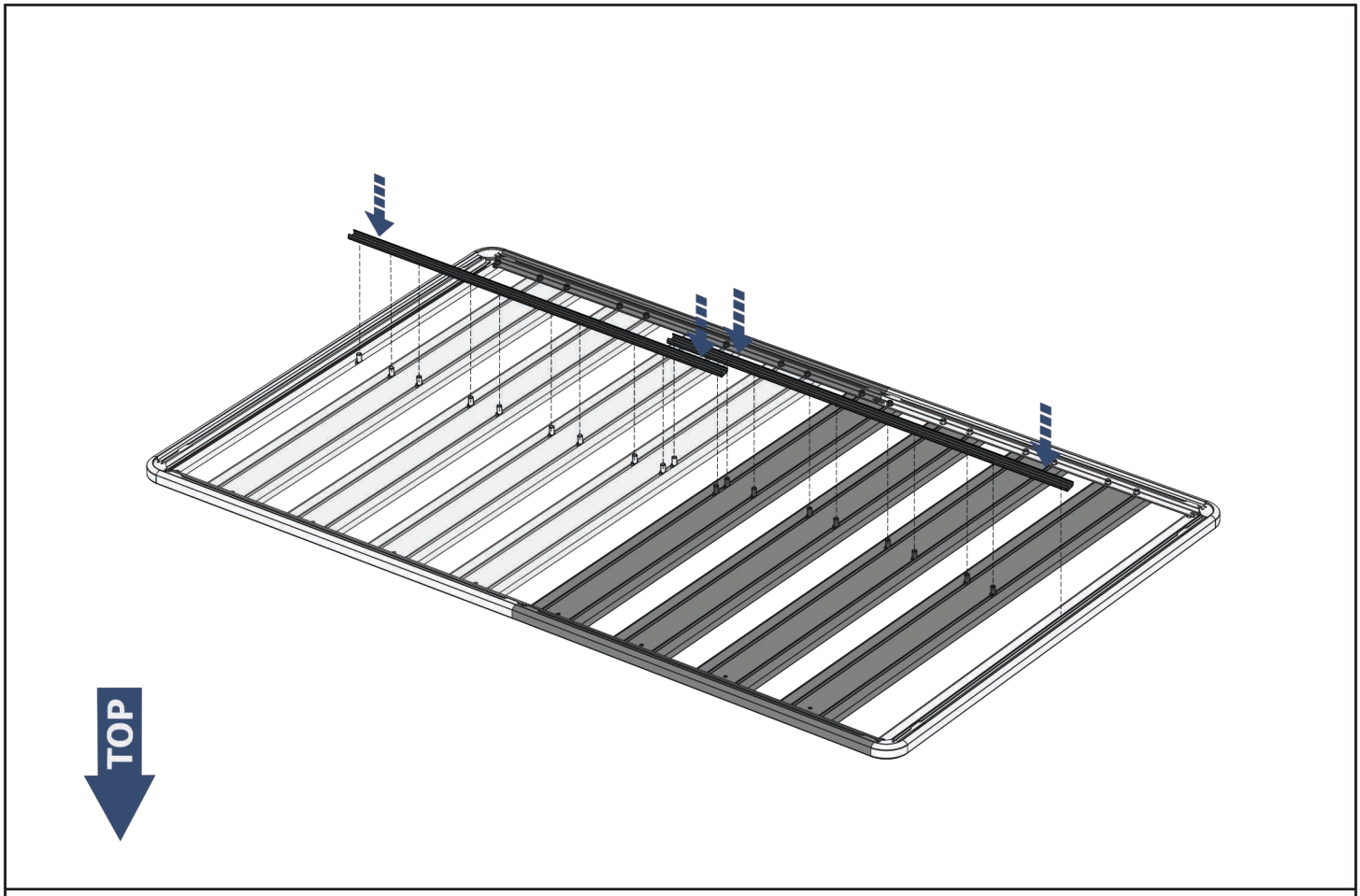
TOP

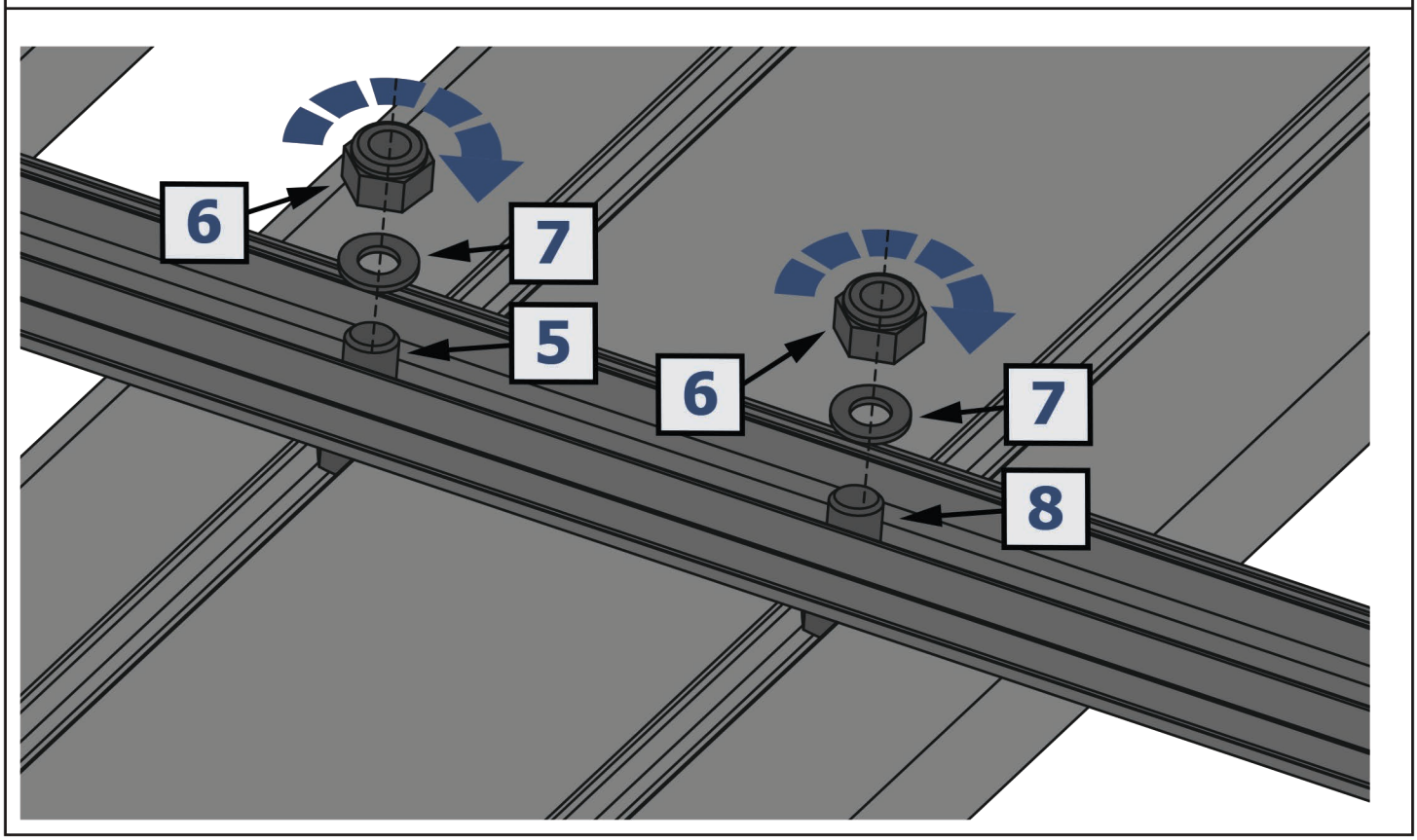
6
7
5
6
7
8

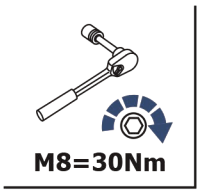

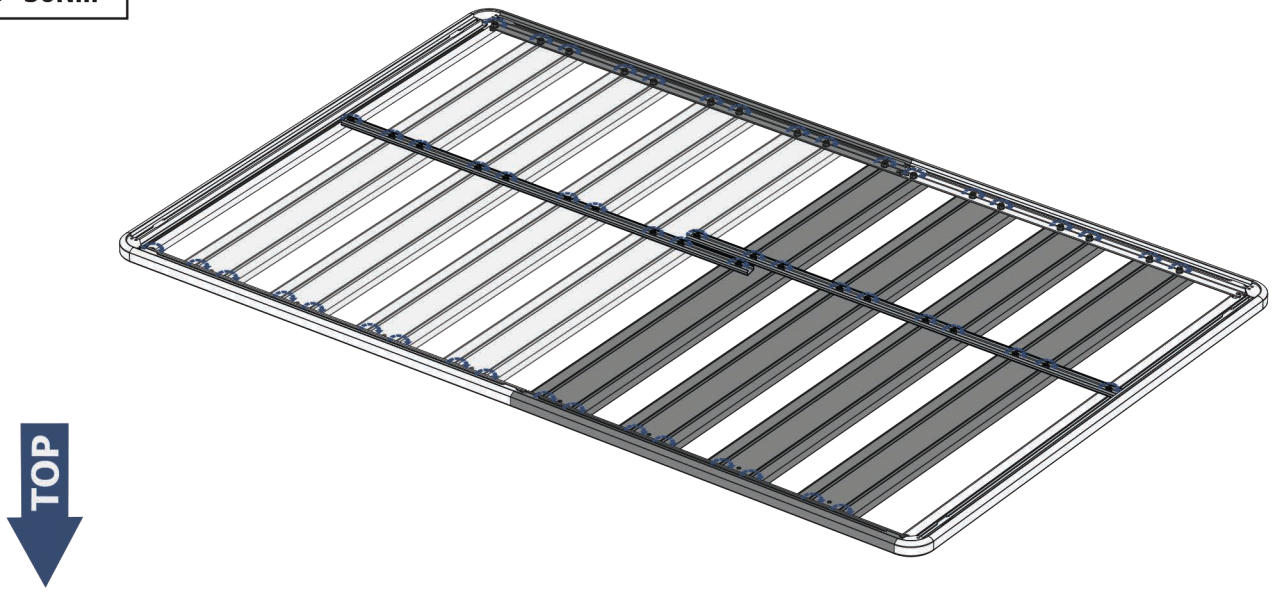

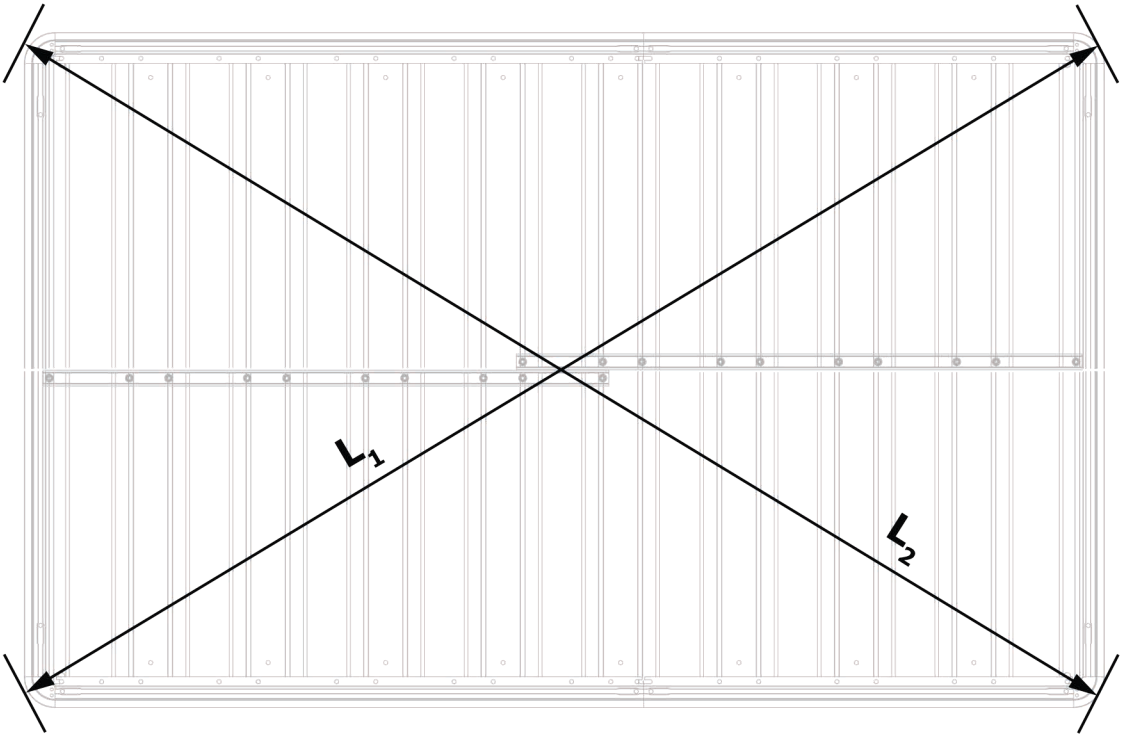

$L_1 = L_2 \pm 1mm$